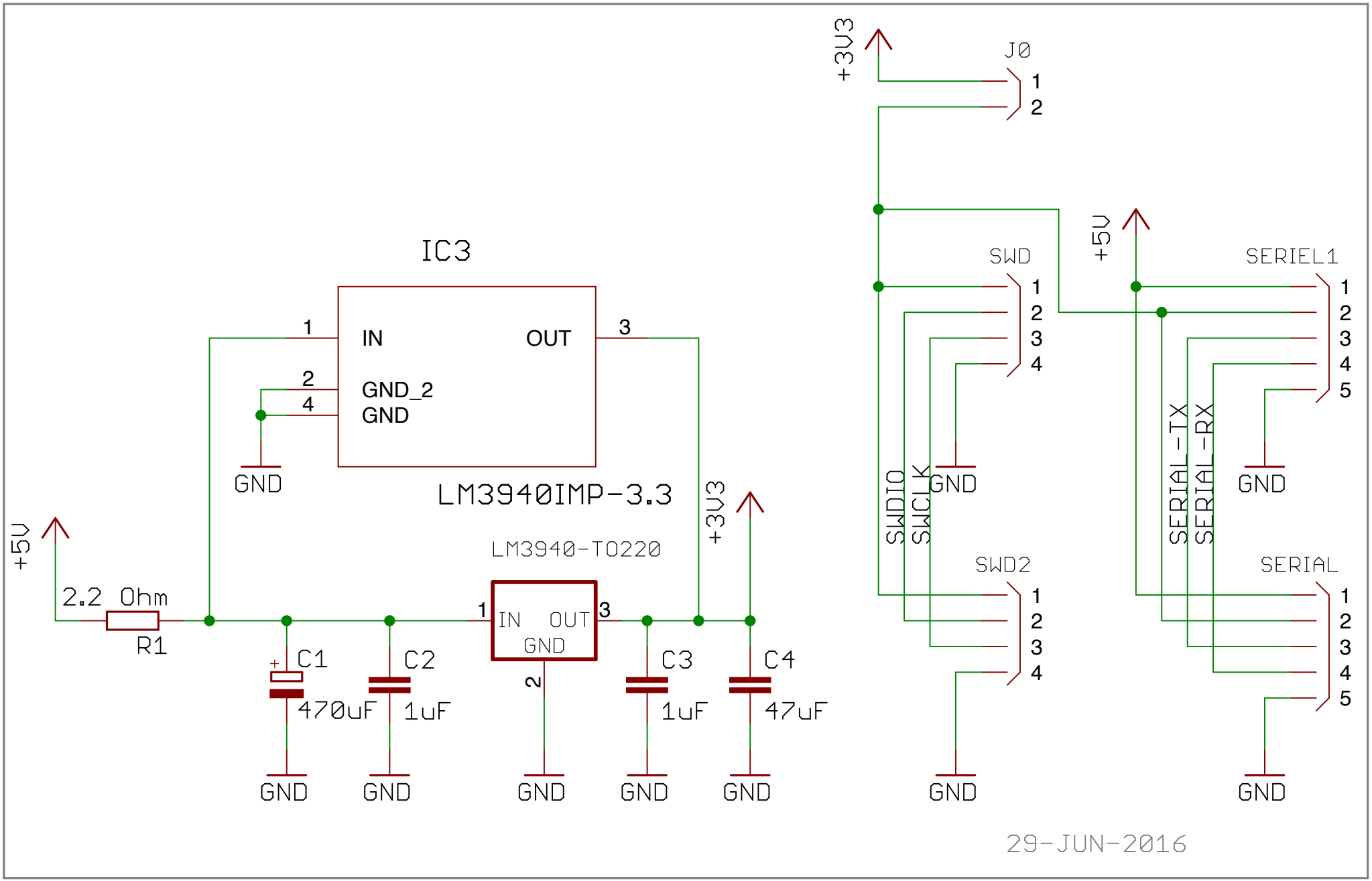
IC3
IN
OUT
GND_2
GND
LM3940IMP-3.3
LM3940-TO220
IN OUT
GND
+5V
2.2 Ohm
R1
C1
470uF
C2
1uF
C3
1uF
C4
47uF
GND
+3V3
J0
SWD
SWD2
SWDIO
SWCLK
SERIEL1
SERIAL
SERIAL-TX
SERIAL-RX
29-JUN-2016